Work Order ID 159022

Tuesday, April 04, 2017 4:49:16 PM

159022

Item ID: D119-646-314 **Accept** *N900040100* **Setup Start** *NS1*

Revision ID: **Stop** *NS2*

Item Name: Skidtube Protector, RH

Start Date: 4/11/2017 **Start Qty:** 1.00 *1* **Cust Item ID:**

Required Date: 4/21/2017 **Req'd Qty:** 1.00 *1* **Customer:**

Reference: SCHEDULED

Approvals: **Process Plan:** DAS 21 9-89 **Date:** APR 0 5 2017 **Tooling:** _____ **Date:** _____ **Run Start** *NR1*

QC: _____ **Date:** _____ **SPC (Y/N):** _____ **Date:** _____ **Stop** *NR2*

Sequence ID/ Work Center ID	Operation Description	Set Up/ Run Hours	Tool ID	Tool #	Plan Code	Accept Qty	Reject Qty	Reject Number	Insp. Stamp
Draw Nbr / **Revision Nbr**									
DSI9734 / A		DAS 6 9-89 APR 0 5 2017							
100 *100* DC	Document Control DOCUMENT CONTROL	0.00				DAS 27 9-89 APR 0 6 2017			
Doc.Control -USB or Paperwork	**Memo** Photocopy bluefile & type labels per PPP D119-646-313 CHG001	0.00							
110 *110* Packaging	Pick Kit	0.00				APR 0 6 2017	DAS 6 9-89	DAS 28 9-89	
Packaging	**Memo**	0.00							
120 *120* QC	QC4- 100% Inspect kits for completeness	0.00				DAS 27 9-89 APR 0 6 2017			
Quality Control	**Memo**	0.03							

DART AEROSPACE

DQA: _____ Date: _____

WORK ORDER NON-CONFORMANCE / UPDATE

QA Closed: Date:

Work Order update only ☐

Work Order: _____

Part No. _____

NCR No.

DISPOSITION

- Rework ☐
- Scrap ☐
- Use-as-is ☐
- Suspected Unapproved ☐

AGAINST DEPARTMENT/PROCESS

Skid-tube	☐	Cross tube	☐	Water Jet	☐	Engineering	☐
Machining	☐	Small Fab	☐	Prod. Eng. Coor.	☐	Quality	☐
Thermoforming	☐	Finishing	☐	Rec/Store/Packaging	☐	Other	☐
Large Fab	☐	Composite	☐	Supplier	☐		

Date :

Step #:

QTY Effective :

MRB (QSI042) Approval

Description Work Order Deviation

Disposition

Completed By

Lead hand / Supervisor Approval Verification

QC / QA Coordinator Approval

Root Cause

Environment	☐	☐	No Re-verfication
Design	☐	☐	Operator
Doc/Data	☐	☐	Offset/Setup
Equip/Tooling	☐	☐	Supplier
Handling/Pre	☐	☐	Training
Material	☐	☐	Use for Testing
Internal Transport	☐	☐	Poor Information
Tribal Knowledge	☐	☐	Rushing
LOA	☐	☐	Product Improvement
Substation	☐	☐	Process Improvement
Past Expiry Date	☐	☐	Manufacturing Process
Misidentified	☐	☐	Past Due

FAULT CATEGORY

☐	Pressure/Forced	☐	Temperature/Cure	☐	Power Loss/Surge	☐	Positioned Wrong
☐	Bending	☐	Set-up	☐	Folio/Program	☐	Outside Dimensions
☐	Centre Not Concentric	☐	BOM/Route	☐	Grain	☐	Over/Under tolerance
☐	Cracks	☐	Broken/Damage/Defect	☐	Weld	☐	Part Incorrect
☐	Crimp/Kink/Ripple/Wave	☐	Inspection Incomplete/Unqualified	☐	Wrong Stock Pulled	☐	Part Lost/Missing
☐	Cuffs	☐	Contamination	☐	Out of Sequence	☐	Part Moved
☐	Crushing	☐	Countersink	☐	Off-set	☐	Drawing
☐	Heat Treat	☐	Cut Too Short	☐	Mislabeled	☐	Finish
☐	Wave/Twist in Tube	☐	Instructions Incomplete/Unclear	☐	Fit/Function	☐	Misread
☐	Marks/Chatter	☐	Drill Holes	☐	Misaligned/off center	☐	Turning Sequence

☐ OTHER :

Work Order ID 159022

Tuesday, April 04, 2017 4:49:16 PM

159022

Item ID: D119-646-314 **Accept** *N9000040100* **Setup Start** *NS1*

Revision ID: **Stop** *NS2*

Item Name: Skidtube Protector, RH

Start Date: 4/11/2017 **Start Qty:** 1.00 *1* **Cust Item ID:**

Required Date: 4/21/2017 **Req'd Qty:** 1.00 *1* **Customer:**

Reference: SCHEDULED

Run Start *NR1*

Stop *NR2*

Approvals: **Process Plan:** _____ **Date:** _____ **Tooling:** _____ **Date:** _____

QC: _____ **Date:** _____ **SPC (Y/N):** _____ **Date:** _____

Sequence ID/ Work Center ID	Operation Description	Set Up/ Run Hours	Tool ID	Tool #	Plan Code	Accept Qty	Reject Qty	Reject Number	Insp. Stamp
130		0.00							
130	Packaging								
Packaging	**Memo**	0.00			DAS 28 9-89	DAS 27 9-89			
Packaging	Identify and pack for shipping as per PPP D119-646-313 Location: fs 128B					APR 0 6 2017			
140	QC21- Final Inspection - Work Order Release	0.00				DAS 21 9-89		APR 0 7 2017	
140									
QC	**Memo**	0.10							
Quality Control									

DAS 21 9-89 APR 0 7 2017

DART AEROSPACE

DQA: _____ Date: _____

WORK ORDER NON-CONFORMANCE / UPDATE

QA Closed: Date: Work Order update only ☐

Work Order: _____ Part No. _____ NCR No.	**DISPOSITION** Rework ☐ Scrap ☐ Use-as-is ☐ Suspected Unapproved ☐	**AGAINST DEPARTMENT/PROCESS** Skid-tube ☐ Cross tube ☐ Water Jet ☐ Engineering ☐ Machining ☐ Small Fab ☐ Prod. Eng. Coor. ☐ Quality ☐ Thermoforming ☐ Finishing ☐ Rec/Store/Packaging ☐ Other ☐ Large Fab ☐ Composite ☐ Supplier ☐

Date :	Step #:	QTY Effective :	MRB (QSI042) Approval

Description Work Order Deviation	Disposition	
		Completed By
		Lead hand / Supervisor Approval Verification
		QC / QA Coordinator Approval

Root Cause				FAULT CATEGORY			
Environment	☐	☐	No Re-verfication	☐ Pressure/Forced	☐ Temperature/Cure	☐ Power Loss/Surge	☐ Positioned Wrong
Design	☐	☐	Operator	☐ Bending	☐ Set-up	☐ Folio/Program	☐ Outside Dimensions
Doc/Data	☐	☐	Offset/Setup	☐ Centre Not Concentric	☐ BOM/Route	☐ Grain	☐ Over/Under tolerance
Equip/Tooling	☐	☐	Supplier	☐ Cracks	☐ Broken/Damage/Defect	☐ Weld	☐ Part Incorrect
Handling/Pre	☐	☐	Training	☐ Crimp/Kink/Ripple/Wave	☐ Inspection Incomplete/Unqualified	☐ Wrong Stock Pulled	☐ Part Lost/Missing
Material	☐	☐	Use for Testing	☐ Cuffs	☐ Contamination	☐ Out of Sequence	☐ Part Moved
Internal Transport	☐	☐	Poor Information	☐ Crushing	☐ Countersink	☐ Off-set	☐ Drawing
Tribal Knowledge	☐	☐	Rushing	☐ Heat Treat	☐ Cut Too Short	☐ Mislabeled	☐ Finish
LOA	☐	☐	Product Improvement	☐ Wave/Twist in Tube	☐ Instructions Incomplete/Unclear	☐ Fit/Function	☐ Misread
Substation	☐	☐	Process Improvement	☐ Marks/Chatter	☐ Drill Holes	☐ Misaligned/off center	☐ Turning Sequence
Past Expiry Date	☐	☐	Manufacturing Process				
Misidentified	☐	☐	Past Due	☐ OTHER :			

Picklist Print

Tuesday, April 04, 2017 4:49:15 PM

Work Order ID: 159022

159022

Parent Item: D119-646-314

D119-646-314

Parent Item Name: Skidtube Protector, RH

Start Date: 4/11/2017 **Required Date:** 4/21/2017

Start Qty: 1.00 **Required Qty:** 1.00

Comments: IPP REV:A 15.12.10 NEW ISSUE DD VERF:JLM

Component Item ID/ Item Name	Replacement Item ID	Mfg/ Purch	Bin Item	Primary Location	Last Location	Route Seq ID	Unit of Measure	Qty on Hand	Qty per Kit	Total Qty	Qty Issued	Date Issued	Status
D3904-1		Manufactured	No			110	Each	142.0000	6	6			
D3904-1									**		APR 0 6 2017	DAS 6 9-89	DAS 28 9-89
Washer													
				Location			**Loc Qty**		**Loc Code**				
DAS 27 9-89				FP001			142						
					141452		58			6			
					152159		84						
D4506-3		Manufactured	No			110	Each	30.0000	6	6			
D4506-3									**		APR 0 6 2017	DAS 6 9-89	DAS 28 9-89
Washer													
				Location			**Loc Qty**		**Loc Code**				
DAS 27 9-89				ST107			30						
					157943		30			6			
D5369-2		Manufactured	No			110	Each	3.0000	1	1			
D5369-2									**		APR 0 6 2017	DAS 6 9-89	S 28 9-89
Cable Guard													
				Location			**Loc Qty**		**Loc Code**				
DAS 27 9-89				ST260B			3						
					157938		3			2			
D5371-2		Manufactured	No			110	Each	3.0000	1	1			
D5371-2									**		APR 0 6 2017	DAS 6 9-89	AS 28 9-89
Hook													
				Location			**Loc Qty**		**Loc Code**				
DAS 27 9-89				prelim			1						
					139942		1						
				ST166			2						
					157939		2			1			

DART AEROSPACE

DQA: _____ Date: _____

WORK ORDER NON-CONFORMANCE / UPDATE

QA Closed: Date:

Work Order update only ☐

Work Order: _____ Part No. _____ NCR No.	**DISPOSITION** Rework ☐ Scrap ☐ Use-as-is ☐ Suspected Unapproved ☐	**AGAINST DEPARTMENT/PROCESS** Skid-tube ☐ Cross tube ☐ Water Jet ☐ Engineering ☐ Machining ☐ Small Fab ☐ Prod. Eng. Coor. ☐ Quality ☐ Thermoforming ☐ Finishing ☐ Rec/Store/Packaging ☐ Other ☐ Large Fab ☐ Composite ☐ Supplier ☐

Date :	Step #:	QTY Effective :	MRB (QSI042) Approval

Description Work Order Deviation	Disposition	
		Completed By
		Lead hand / Supervisor Approval Verification
		QC / QA Coordinator Approval

Root Cause				FAULT CATEGORY			
Environment	☐	☐	No Re-verfication	☐ Pressure/Forced	☐ Temperature/Cure	☐ Power Loss/Surge	☐ Positioned Wrong
Design	☐	☐	Operator	☐ Bending	☐ Set-up	☐ Folio/Program	☐ Outside Dimensions
Doc/Data	☐	☐	Offset/Setup	☐ Centre Not Concentric	☐ BOM/Route	☐ Grain	☐ Over/Under tolerance
Equip/Tooling	☐	☐	Supplier	☐ Cracks	☐ Broken/Damage/Defect	☐ Weld	☐ Part Incorrect
Handling/Pre	☐	☐	Training	☐ Crimp/Kink/Ripple/Wave	☐ Inspection Incomplete/Unqualified	☐ Wrong Stock Pulled	☐ Part Lost/Missing
Material	☐	☐	Use for Testing	☐ Cuffs	☐ Contamination	☐ Out of Sequence	☐ Part Moved
Internal Transport	☐	☐	Poor Information	☐ Crushing	☐ Countersink	☐ Off-set	☐ Drawing
Tribal Knowledge	☐	☐	Rushing	☐ Heat Treat	☐ Cut Too Short	☐ Mislabeled	☐ Finish
LOA	☐	☐	Product Improvement	☐ Wave/Twist in Tube	☐ Instructions Incomplete/Unclear	☐ Fit/Function	☐ Misread
Substation	☐	☐	Process Improvement	☐ Marks/Chatter	☐ Drill Holes	☐ Misaligned/off center	☐ Turning Sequence
Past Expiry Date	☐	☐	Manufacturing Process				
Misidentified	☐	☐	Past Due	☐ OTHER :			

Picklist Print

Tuesday, April 04, 2017 4:49:15 PM

Work Order ID: 159022 *159022*

Parent Item: D119-646-314 *D119-646-314*

Parent Item Name: Skidtube Protector, RH

Start Date: 4/11/2017 **Required Date:** 4/21/2017

Start Qty: 1.00 **Required Qty:** 1.00

D5372-1 Manufactured No 110 Each 5.0000 1 1

D5372-1 ** APR 0 6 2017 DAS 6 9-89 DAS 28 9-89

Plug

Location	Loc Qty	Loc Code
ST166	5	
157942	5	

DAS 27 9-89

D5374-1 Manufactured No 110 Each 21.0000 6 6

D5374-1 ** APR 0 6 2017 DAS 6 9-89 DAS 28 9-89

Bushing

Location	Loc Qty	Loc Code
ST166	21	
157941	21	

DAS 27 9-89

D5374-3 Manufactured No 110 Each 18.0000 8 8

D5374-3 ** APR 0 6 2017 DAS 6 9-89 DAS 28 9-89

Bushing

Location	Loc Qty	Loc Code
prelim	8	
139857	8	
ST166	10	
157944	10	

DAS 27 9-89

D5376-1 Manufactured No 110 Each 6.0000 1 1

D5376-1 ** APR 0 6 2017 DAS 6 9-89 DAS 28 9-89

Drilling Tool

Location	Loc Qty	Loc Code
ST365	6	
157940	6	

DAS 27 9-89

DART AEROSPACE

DQA: _____ Date: _____

WORK ORDER NON-CONFORMANCE / UPDATE

QA Closed: Date:

Work Order update only ☐

Work Order: _____	**DISPOSITION**	**AGAINST DEPARTMENT/PROCESS**
Part No. _____	Rework ☐	Skid-tube ☐ Cross tube ☐ Water Jet ☐ Engineering ☐
	Scrap ☐	Machining ☐ Small Fab ☐ Prod. Eng. Coor. ☐ Quality ☐
	Use-as-is ☐	Thermoforming ☐ Finishing ☐ Rec/Store/Packaging ☐ Other ☐
NCR No.	Suspected Unapproved ☐	Large Fab ☐ Composite ☐ Supplier ☐

Date :	Step #:	QTY Effective :	**MRB (QSI042) Approval**
Description Work Order Deviation		**Disposition**	**Completed By**
			Lead hand / Supervisor Approval Verification
			QC / QA Coordinator Approval

Root Cause

Environment	☐	☐	No Re-verfication
Design	☐	☐	Operator
Doc/Data	☐	☐	Offset/Setup
Equip/Tooling	☐	☐	Supplier
Handling/Pre	☐	☐	Training
Material	☐	☐	Use for Testing
Internal Transport	☐	☐	Poor Information
Tribal Knowledge	☐	☐	Rushing
LOA	☐	☐	Product Improvement
Substation	☐	☐	Process Improvement
Past Expiry Date	☐	☐	Manufacturing Process
Misidentified	☐	☐	Past Due

FAULT CATEGORY

☐ Pressure/Forced	☐ Temperature/Cure	☐ Power Loss/Surge	☐ Positioned Wrong
☐ Bending	☐ Set-up	☐ Folio/Program	☐ Outside Dimensions
☐ Centre Not Concentric	☐ BOM/Route	☐ Grain	☐ Over/Under tolerance
☐ Cracks	☐ Broken/Damage/Defect	☐ Weld	☐ Part Incorrect
☐ Crimp/Kink/Ripple/Wave	☐ Inspection Incomplete/Unqualified	☐ Wrong Stock Pulled	☐ Part Lost/Missing
☐ Cuffs	☐ Contamination	☐ Out of Sequence	☐ Part Moved
☐ Crushing	☐ Countersink	☐ Off-set	☐ Drawing
☐ Heat Treat	☐ Cut Too Short	☐ Mislabeled	☐ Finish
☐ Wave/Twist in Tube	☐ Instructions Incomplete/Unclear	☐ Fit/Function	☐ Misread
☐ Marks/Chatter	☐ Drill Holes	☐ Misaligned/off center	☐ Turning Sequence

☐ OTHER :

Picklist Print

Tuesday, April 04, 2017 4:49:15 PM

Work Order ID: 159022 *159022*

Parent Item: D119-646-314 *D119-646-314*

Parent Item Name: Skidtube Protector, RH

Start Date: 4/11/2017 **Required Date:** 4/21/2017

Start Qty: 1.00 **Required Qty:** 1.00

AN3-45A Purchased No 110 Each 17.0000 4 4 **

AN3-45A

Bolt

APR 0 6 2017 DAS 6 9-89 DAS 28 9-89

DAS 27 9-89

Location	Loc Qty	Loc Code
ST346	17	
m137075	17	

4

AN3-47A Purchased No 110 Each 22.0000 6 6 **

AN3-47A

Bolt

APR 0 6 2017 DAS 6 9-89 DAS 28 9-89

DAS 27 9-89

Location	Loc Qty	Loc Code
ST346	22	
m137075	22	

6

AN3-50A Purchased No 110 Each 20.0000 6 6 **

AN3-50A

Bolt

APR 0 6 2017 DAS 6 9-89 DAS 28 9-89

DAS 27 9-89

Location	Loc Qty	Loc Code
ST346	20	
m137075	20	

6

NAS1149D0332J Purchased No 110 Each 1,676.000 14 14 **

NAS1149D0332J

Washer

APR 0 6 2017 DAS 6 9-89 DAS 28 9-89

DAS 27 9-89

Location	Loc Qty	Loc Code
FP	22	
m136015	22	
GA	522	
m136643	522	
ST260a	1000	
m137075	1000	
ST264	132	
m136015	132	

14

DART AEROSPACE

DQA: _____ Date: _____

WORK ORDER NON-CONFORMANCE / UPDATE

QA Closed: Date:

Work Order update only ☐

Work Order: _____ Part No. _____ NCR No.	**DISPOSITION** Rework ☐ Scrap ☐ Use-as-is ☐ Suspected Unapproved ☐	**AGAINST DEPARTMENT/PROCESS** Skid-tube ☐ Cross tube ☐ Water Jet ☐ Engineering ☐ Machining ☐ Small Fab ☐ Prod. Eng. Coor. ☐ Quality ☐ Thermoforming ☐ Finishing ☐ Rec/Store/Packaging ☐ Other ☐ Large Fab ☐ Composite ☐ Supplier ☐

Date :	Step #:	QTY Effective :	MRB (QSI042) Approval

Description Work Order Deviation	Disposition	
		Completed By
		Lead hand / Supervisor Approval Verification
		QC / QA Coordinator Approval

Root Cause				FAULT CATEGORY			
Environment	☐	☐	No Re-verfication	☐ Pressure/Forced	☐ Temperature/Cure	☐ Power Loss/Surge	☐ Positioned Wrong
Design	☐	☐	Operator	☐ Bending	☐ Set-up	☐ Folio/Program	☐ Outside Dimensions
Doc/Data	☐	☐	Offset/Setup	☐ Centre Not Concentric	☐ BOM/Route	☐ Grain	☐ Over/Under tolerance
Equip/Tooling	☐	☐	Supplier	☐ Cracks	☐ Broken/Damage/Defect	☐ Weld	☐ Part Incorrect
Handling/Pre	☐	☐	Training	☐ Crimp/Kink/Ripple/Wave	☐ Inspection Incomplete/Unqualified	☐ Wrong Stock Pulled	☐ Part Lost/Missing
Material	☐	☐	Use for Testing	☐ Cuffs	☐ Contamination	☐ Out of Sequence	☐ Part Moved
Internal Transport	☐	☐	Poor Information	☐ Crushing	☐ Countersink	☐ Off-set	☐ Drawing
Tribal Knowledge	☐	☐	Rushing	☐ Heat Treat	☐ Cut Too Short	☐ Mislabeled	☐ Finish
LOA	☐	☐	Product Improvement	☐ Wave/Twist in Tube	☐ Instructions Incomplete/Unclear	☐ Fit/Function	☐ Misread
Substation	☐	☐	Process Improvement	☐ Marks/Chatter	☐ Drill Holes	☐ Misaligned/off center	☐ Turning Sequence
Past Expiry Date	☐	☐	Manufacturing Process				
Misidentified	☐	☐	Past Due	☐ OTHER :			

Picklist Print

Tuesday, April 04, 2017 4:49:16 PM

Work Order ID: 159022

159022

Parent Item: D119-646-314

D119-646-314

Parent Item Name: Skidtube Protector, RH

Start Date: 4/11/2017 **Required Date:** 4/21/2017

Start Qty: 1.00 **Required Qty:** 1.00

MS21042L3	Purchased	No	110	Each	1,961.000	10	10	

MS21042L3

Nut

**

DAS 6 9-89

DAS 28 9-89

APR 0 6 2017

Location	Loc Qty	Loc Code
FP001	100	
m135945	100	
GA	208	
m134360	102	
M136665	106	
OVER007	800	
m134360	0	
M136665	300	
m137166	500	
ST303	853	
m137073	853	

10

DAS 27 9-89

DART AEROSPACE

DQA: _____ Date: _____

WORK ORDER NON-CONFORMANCE / UPDATE

QA Closed: Date:

Work Order update only ☐

Work Order: _____ Part No. _____ NCR No.	**DISPOSITION** Rework ☐ Scrap ☐ Use-as-is ☐ Suspected Unapproved ☐	**AGAINST DEPARTMENT/PROCESS** Skid-tube ☐ Cross tube ☐ Water Jet ☐ Engineering ☐ Machining ☐ Small Fab ☐ Prod. Eng. Coor. ☐ Quality ☐ Thermoforming ☐ Finishing ☐ Rec/Store/Packaging ☐ Other ☐ Large Fab ☐ Composite ☐ Supplier ☐

Date :	Step #:	QTY Effective :	MRB (QSI042) Approval

Description Work Order Deviation	Disposition	
		Completed By
		Lead hand / Supervisor Approval Verification
		QC / QA Coordinator Approval

Root Cause				FAULT CATEGORY			
Environment	☐	☐	No Re-verfication	☐ Pressure/Forced	☐ Temperature/Cure	☐ Power Loss/Surge	☐ Positioned Wrong
Design	☐	☐	Operator	☐ Bending	☐ Set-up	☐ Folio/Program	☐ Outside Dimensions
Doc/Data	☐	☐	Offset/Setup	☐ Centre Not Concentric	☐ BOM/Route	☐ Grain	☐ Over/Under tolerance
Equip/Tooling	☐	☐	Supplier	☐ Cracks	☐ Broken/Damage/Defect	☐ Weld	☐ Part Incorrect
Handling/Pre	☐	☐	Training	☐ Crimp/Kink/Ripple/Wave	☐ Inspection Incomplete/Unqualified	☐ Wrong Stock Pulled	☐ Part Lost/Missing
Material	☐	☐	Use for Testing	☐ Cuffs	☐ Contamination	☐ Out of Sequence	☐ Part Moved
Internal Transport	☐	☐	Poor Information	☐ Crushing	☐ Countersink	☐ Off-set	☐ Drawing
Tribal Knowledge	☐	☐	Rushing	☐ Heat Treat	☐ Cut Too Short	☐ Mislabeled	☐ Finish
LOA	☐	☐	Product Improvement	☐ Wave/Twist in Tube	☐ Instructions Incomplete/Unclear	☐ Fit/Function	☐ Misread
Substation	☐	☐	Process Improvement	☐ Marks/Chatter	☐ Drill Holes	☐ Misaligned/off center	☐ Turning Sequence
Past Expiry Date	☐	☐	Manufacturing Process				
Misidentified	☐	☐	Past Due	☐ OTHER :			

DART SERVICE INSTRUCTION

TO AMEND INSTALLATION INSTRUCTIONS IIN-D119-646 REV. C
AND INSTRUCTIONS FOR CONTINUED AIRWORTHINESS ICA-D119-646 REV. 2
REF FAA STC: SR02024SE
REF EASA STC: 10040294

1.0 PURPOSE:

The purpose of this Dart Service Instructions is to add D119-646-313/-314 Skidtube Protector Kit to make the D119-646-011/-012/-111/-112/-211/-212 Skidtube Kits compatible with the 109-0812-68-105 Hoist Structural Provision Kit and the 109-0816-18-301 Rappelling Kit. The D119-646-313 Skidtube Protector, LH replaces the 109-B710-05-201 kit and the D119-646-314 Skidtube Protector, RH replaces the 109-B710-05-202 kit.

2.0 D119-646-313/-314 INSTALLATION:

These instructions are for modifying the D119-646-011/-012/-111/-112 Skidtube Installations.

2.1 Remove D3492-045 Plug Assemblies from two locations on each side of the skidtube as shown in Figure 3.
2.2 Position D5376-1 drilling jig tool with the arrow pointing fwd as shown in Figure 3. Use 2x AN3-45A bolts to hold the jig in place. Transfer drill 4x ∅0.129" (#30 drill) holes from D5376-1 drilling jig to skidtube ridge as shown in Figure 3. **Caution:** Drill perpendicular to the skidtube ridge.
2.3 Remove drilling jig. Using a 5/16" drill, open up the pilot holes and drill through the skidtube ridge and center web inside of the skidtube. **Caution:** Drill perpendicular to the skidtube ridge.
2.4 Countersunk 4x 5/16" holes to ∅0.348" (8.84mm) x 100° as shown in Figure 3 and deburr.
2.5 Repeat steps 2.2 to 2.4 for the opposite side of the skidtube.
2.6 Vacuum the debris from inside of the skidtube. Touch up affected area using (Alodine 1200 or 1201) per MIL-DTL-5541.
2.7 Install 8x D5374-3 Bushings in the new holes. Seal bushings with Sikaflex-241/-291 or Proseal 890 or MIL-S-8802 Class 'B2' sealant as shown in Section C-C.
2.8 Remove all D3492-045 Plug Assemblies from skidtube fwd of the ground handling wheel lugs.
2.9 If the D119-646-314 Skidtube Protector Kit is required for hoisting operations on the RH side of the aircraft install D5372-1 Plug using 4x AN3-45A bolts, 8x NAS11490D332J washer and 4x MS21042L3 nuts as shown in Section C-C and Figure 4 Detail E. Torque bolts to 15-25 in-lbs (1.7-2.8 N-m).
2.10 If the D119-646-313 Skidtube Protector Kit is required for hoisting operations on the LH side of the aircraft install D5372-1 Plug using 4x AN3-45A bolts, 8x NAS11490D332J washer and 4x MS21042L3 nuts as shown in Section C-C and Figure 4 Detail E. Torque bolts to 15-25 in-lbs (1.7-2.8 N-m).
2.11 If the D119-646-314 Skidtube Protector Kit is required for rappelling operations on the RH side of the aircraft install D5371-2 Hook using 4x AN3-45A bolts, 8x NAS11490D332J washer and 4x MS21042L3 nuts as shown in Section C-C and Figure 5 Detail F. Torque bolts to 15-25 in-lbs (1.7-2.8 N-m).
2.12 If the D119-646-313 Skidtube Protector Kit is required for rappelling operations on the LH side of the aircraft install D5371-1 Hook using 4x AN3-45A bolts, 8x NAS11490D332J washer and 4x MS21042L3 nuts as shown in Section C-C and Figure 5 Detail F. Torque bolts to 15-25 in-lbs (1.7-2.8 N-m).
2.13 Install D5369-2 Cable Guard on the RH side of the aircraft using 6x AN3-47A bolts, 6x D5374-1 Bushings, 6x D4506-3 Washers, 12x NAS11490D332J washers, 6x MS21042L3 nuts as shown in Figure 1 Section A-A. Torque bolts to 15-25 in-lbs (1.7-2.8 N-m).
2.14 Install D5369-1 Cable Guard on the LH side of the aircraft using 6x AN3-47A bolts, 6x D5374-1 Bushings, 6x D4506-3 Washers, 12x NAS11490D332J washers, 6x MS21042L3 nuts as shown in Figure 1 Section A-A. Torque bolts to 15-25 in-lbs (1.7-2.8 N-m).
2.15 Update aircraft log book to indicate installation of the D119-646-313/-314 kit and adjust weight and balance record for the aircraft with weight and balance data provided in Section 5.0 of this document.

NOTE: Additional NAS1149D0332J washers may be installed under the nuts to ensure 1.5-4 threads in safety on the bolts. Although not generally necessary, it is also acceptable to replace the AN3 bolts provided with longer or shorter AN3 bolts, if required.

SHOP COPY
RETURN TO
ENGINEERING
UNCONTROLLED COPY
SUBJECT TO AMENDMENT
WITHOUT NOTICE
WORK ORDER
NO. 1590 22 MS
17 Oct 22

A	NEW ISSUE	RF	15.12.10
REV.	DESCRIPTION	BY	DATE

DESIGN	RF	**DART AEROSPACE USA, INC.** EUGENE, OR	
DRAWN	RF		
CHECKED	HS	DRAWING NO. DSI 9734	REV. A SHEET 1 OF 8
MFG. APPR.	N/A		
APPROVED	HS	TITLE SKIDTUBE PROTECTOR KIT	SCALE NTS
DE APPR.			
DATE	15.12.10		

COPYRIGHT © 2014 BY DART AEROSPACE USA, INC.
THIS DOCUMENT IS PRIVATE AND CONFIDENTIAL AND IS SUPPLIED ON THE EXPRESS CONDITION THAT IT IS NOT TO BE USED FOR ANY PURPOSE OR COPIED OR COMMUNICATED TO ANY OTHER PERSON WITHOUT WRITTEN PERMISSION FROM DART AEROSPACE USA, INC.

3.0 D119-646-313/-314 INSTALLATION:

These instructions are for modifying the D119-646-211/-212 Skidtube Installations.

3.1 Temporarily remove D3849-043 Training Wearplate from aft end of the skidtube per ICA-D119-646 Section 32.

3.2 Position D5376-1 drilling jig tool with the arrow pointing fwd as shown in Figure 3. Use 2x AN3-45A bolts to hold the jig in place. Transfer drill 4x ∅0.129" (#30 drill) holes from D5376-1 drilling jig to skidtube ridge as shown in Figure 3. **Caution:** Drill perpendicular to the skidtube ridge.

3.3 Remove drilling jig. Using a 5/16" drill, open up the pilot holes and drill through the skidtube ridge and center web inside of the skidtube. **Caution:** Drill perpendicular to the skidtube ridge.

3.4 Countersunk 4x 5/16" holes to ∅0.348" (8.84mm) x 100° as shown in Figure 3 and deburr.

3.5 Repeat steps 3.2 to 3.4 for the opposite side of the skidtube.

3.6 Vacuum the debris from inside of the skidtube. Touch up affected area using (Alodine 1200 or 1201) per MIL-DTL-5541.

3.7 Install 8x D5374-3 Bushings in the new holes. Seal bushings with Sikaflex-241/-291 or Proseal 890 or MIL-S-8802 Class 'B2' sealant as shown in Section C-C.

3.8 Remove and discard all hardware attaching the training wearplates in front of the skidtube ground handling lugs.

3.9 If the D119-646-314 Skidtube Protector Kit is required for hoisting operations on the RH side of the aircraft install D5372-1 Plug using 4x AN3-45A bolts, 8x NAS11490D332J washer and 4x MS21042L3 nuts as shown in Section C-C and Figure 4 Detail E. Torque bolts to 15-25 in-lbs (1.7-2.8 N-m).

3.10 If the D119-646-313 Skidtube Protector Kit is required for hoisting operations on the LH side of the aircraft install D5372-1 Plug using 4x AN3-45A bolts, 8x NAS11490D332J washer and 4x MS21042L3 nuts as shown in Section C-C and Figure 4 Detail E. Torque bolts to 15-25 in-lbs (1.7-2.8 N-m).

3.11 If the D119-646-314 Skidtube Protector Kit is required for rappelling operations on the RH side of the aircraft install D5371-2 Hook using 4x AN3-45A bolts, 8x NAS11490D332J washer and 4x MS21042L3 nuts as shown in Section C-C and Figure 5 Detail F. Torque bolts to 15-25 in-lbs (1.7-2.8 N-m).

3.12 If the D119-646-313 Skidtube Protector Kit is required for rappelling operation on the LH side of the aircraft install D5371-1 Hook using 4x AN3-45A bolts, 8x NAS11490D332J washer and 4x MS21042L3 nuts as shown in Section C-C and Figure 5 Detail F. Torque bolts to 15-25 in-lbs (1.7-2.8 N-m).

3.13 Reinstall the D3849-043 Training Wearplate on the aft end of the skidtube per ICA-D119-646 Section 32, except for hardware under D5369-1/-2 Cable Guard.

3.14 Install D5369-2 Cable Guard on the RH side of the aircraft using 6x AN3-50A bolts, 6x D5374-1 Bushings, 6x D3904-1 Washers, 6x MS21042L3 nuts as shown in Figure 2 Section B-B. Torque bolts to 15-25 in-lbs (1.7-2.8 N-m).

3.15 Install D5369-1 Cable Guard on the LH side of the aircraft using 6x AN3-50A bolts, 6x D5374-1 Bushings, 6x D3904-1 Washers, 6x MS21042L3 nuts as shown in Figure 2 Section B-B. Torque bolts to 15-25 in-lbs (1.7-2.8 N-m).

3.16 Update aircraft log book to indicate installation of the D119-646-313/-314 kit and adjust weight and balance record for the aircraft with weight and balance data provided in Section 5.0 of this document.

NOTE: Additional NAS1149D0332J washers may be installed under the nuts to ensure 1.5-4 threads in safety on the bolts. Although not generally necessary, it is also acceptable to replace the AN3 bolts provided with longer or shorter AN3 bolts, if required.

DESIGN	RF	**DART AEROSPACE USA, INC.** EUGENE, OR	
DRAWN	RF		
CHECKED	HS	DRAWING NO. DSI 9734	REV. A
MFG. APPR.	N/A		SHEET 2 OF 8
APPROVED	HS	TITLE SKIDTUBE PROTECTOR KIT	SCALE NTS
DE APPR.			
DATE	15.12.10		

COPYRIGHT © 2014 BY DART AEROSPACE USA, INC.
THIS DOCUMENT IS PRIVATE AND CONFIDENTIAL AND IS SUPPLIED ON THE EXPRESS CONDITION THAT IT IS NOT TO BE USED FOR ANY PURPOSE OR COPIED OR COMMUNICATED TO ANY OTHER PERSON WITHOUT WRITTEN PERMISSION FROM DART AEROSPACE USA, INC.

4.0 PARTS LIST:

Qty. -313	Qty. -314	PART NUMBER	DESCRIPTION
X		D119-646-313	SKIDTUBE PROTECTOR, LH
	X	D119-646-314	SKIDTUBE PROTECTOR, RH
6	6	D3904-1	WASHER
6	6	D4506-3	WASHER
1		D5369-1	CABLE GUARD, LH
	1	D5369-2	CABLE GUARD, RH
1		D5371-1	HOOK, LH
	1	D5371-2	HOOK, RH
1	1	D5372-1	PLUG
6	6	D5374-1	BUSHING
8	8	D5374-3	BUSHING
1	1	D5376-1	DRILLING JIG
4	4	AN3-45A	BOLT
6	6	AN3-47A	BOLT
6	6	AN3-50A	BOLT
14	14	NAS1149D0332J	WASHER
10	10	MS21042L3	NUT

5.0 WEIGHT AND BALANCE

The following weight and balance changes are applicable:

Installation	Weight	LONGITUDINAL		LATERAL	
		Arm	Moment	Arm	Moment
D119-646-313 SKIDTUBE PROTECTOR, LH	4.3 lb 1.95 kg	108.1 in 4.3 m	465 in-lb 8.4 kg-m	-43.4 in 1.7 m	-187 in-lb -3.3 kg-m
D119-646-314 SKIDTUBE PROTECTOR, RH	4.3 lb 1.95 kg	108.1 in 4.30 m	465 in-lb 8.4 kg-m	43.4 in 1.7 m	187 in-lb 3.3 kg-m

DESIGN	RF	DART AEROSPACE USA, INC. EUGENE, OR
DRAWN	RF	
CHECKED	HS	DRAWING NO. REV. A
MFG. APPR.	N/A	DSI 9734 SHEET 3 OF 8
APPROVED	HS	TITLE SCALE
DE APPR.		SKIDTUBE PROTECTOR KIT NTS
DATE	15.12.10	

COPYRIGHT © 2014 BY DART AEROSPACE USA, INC.
THIS DOCUMENT IS PRIVATE AND CONFIDENTIAL AND IS SUPPLIED ON THE EXPRESS CONDITION THAT IT IS NOT TO BE USED FOR ANY PURPOSE OR COPIED OR COMMUNICATED TO ANY OTHER PERSON WITHOUT WRITTEN PERMISSION FROM DART AEROSPACE USA, INC.

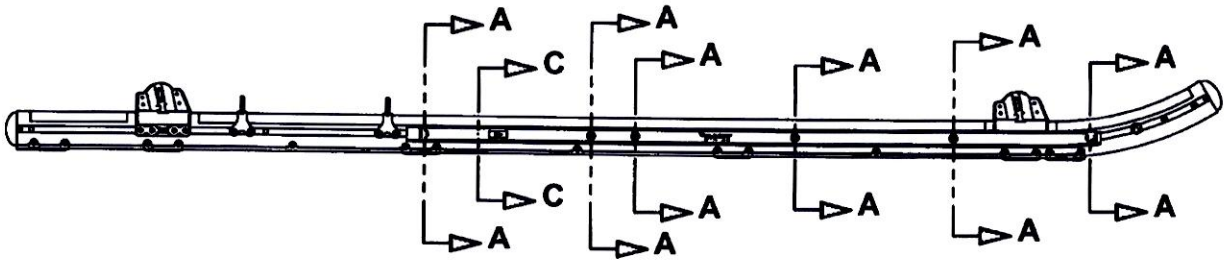

FIGURE 1: D119-646-314 SKIDTUBE PROTECTOR KIT, RH (SHOWN)
(D119-646-313 SKIDTUBE PROTECTOR, LH (OPPOSITE))
(SHOWN INSTALLED ON D119-646-011/-012/-111/-112 SKIDTUBES)

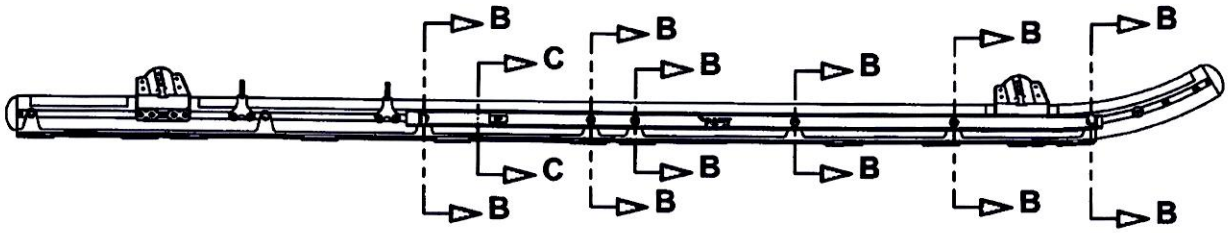

FIGURE 2: D119-646-314 SKIDTUBE PROTECTOR KIT, RH (SHOWN)
(D119-646-313 SKIDTUBE PROTECTOR, LH (OPPOSITE))
(SHOWN INSTALLED ON D119-646-211/-212 SKIDTUBES)

DESIGN	RF	**DART AEROSPACE USA, INC.** EUGENE, OR
DRAWN	RF	
CHECKED	HS	DRAWING NO. DSI 9734 — REV. A — SHEET 4 OF 8
MFG. APPR.	N/A	
APPROVED	HS	TITLE SKIDTUBE PROTECTOR KIT — SCALE NTS
DE APPR.		
DATE	15.12.10	

COPYRIGHT © 2014 BY DART AEROSPACE USA, INC.
THIS DOCUMENT IS PRIVATE AND CONFIDENTIAL AND IS SUPPLIED ON THE EXPRESS CONDITION THAT IT IS NOT TO BE USED FOR ANY PURPOSE OR COPIED OR COMMUNICATED TO ANY OTHER PERSON WITHOUT WRITTEN PERMISSION FROM DART AEROSPACE USA, INC.

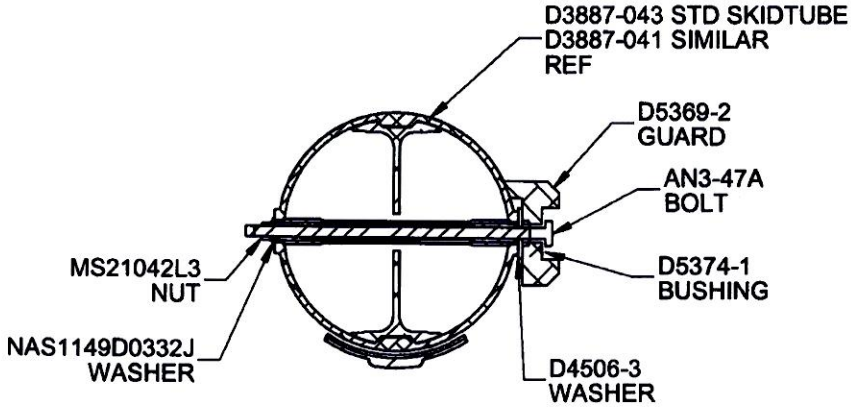

SECTION A-A

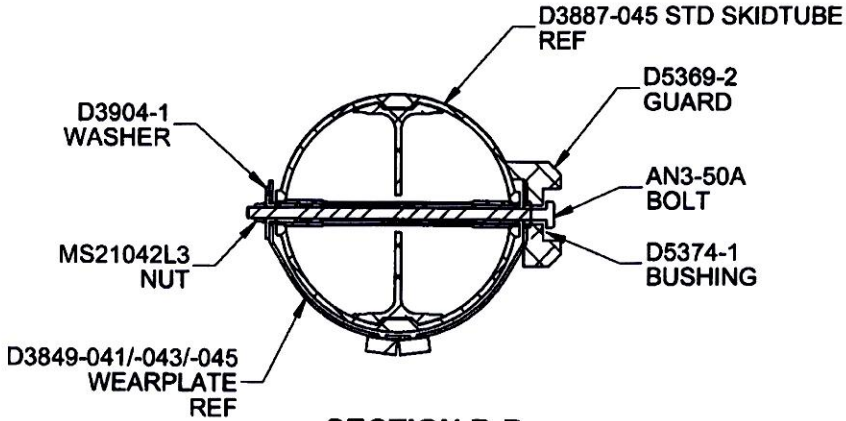

SECTION B-B

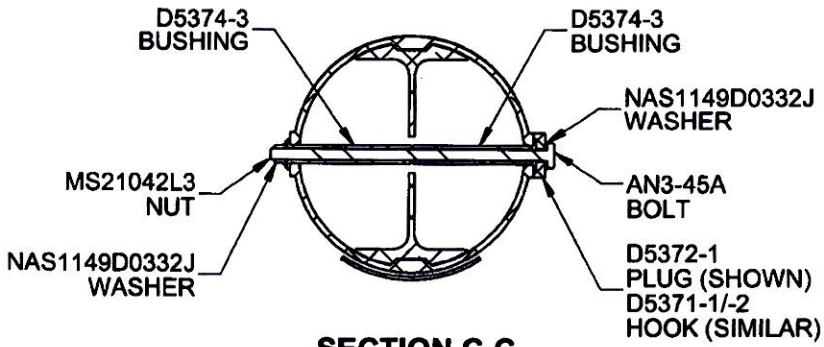

SECTION C-C
(D5369-2 NOT SHOWN FOR CLARITY)

DESIGN	RF	**DART AEROSPACE USA, INC.** EUGENE, OR
DRAWN	RF	
CHECKED	HS	DRAWING NO. DSI 9734 — REV. A — SHEET 5 OF 8
MFG. APPR.	N/A	
APPROVED	HS	TITLE: SKIDTUBE PROTECTOR KIT — SCALE: NTS
DE APPR.		
DATE	15.12.10	

COPYRIGHT © 2014 BY DART AEROSPACE USA, INC.
THIS DOCUMENT IS PRIVATE AND CONFIDENTIAL AND IS SUPPLIED ON THE EXPRESS CONDITION THAT IT IS NOT TO BE USED FOR ANY PURPOSE OR COPIED OR COMMUNICATED TO ANY OTHER PERSON WITHOUT WRITTEN PERMISSION FROM DART AEROSPACE USA, INC.

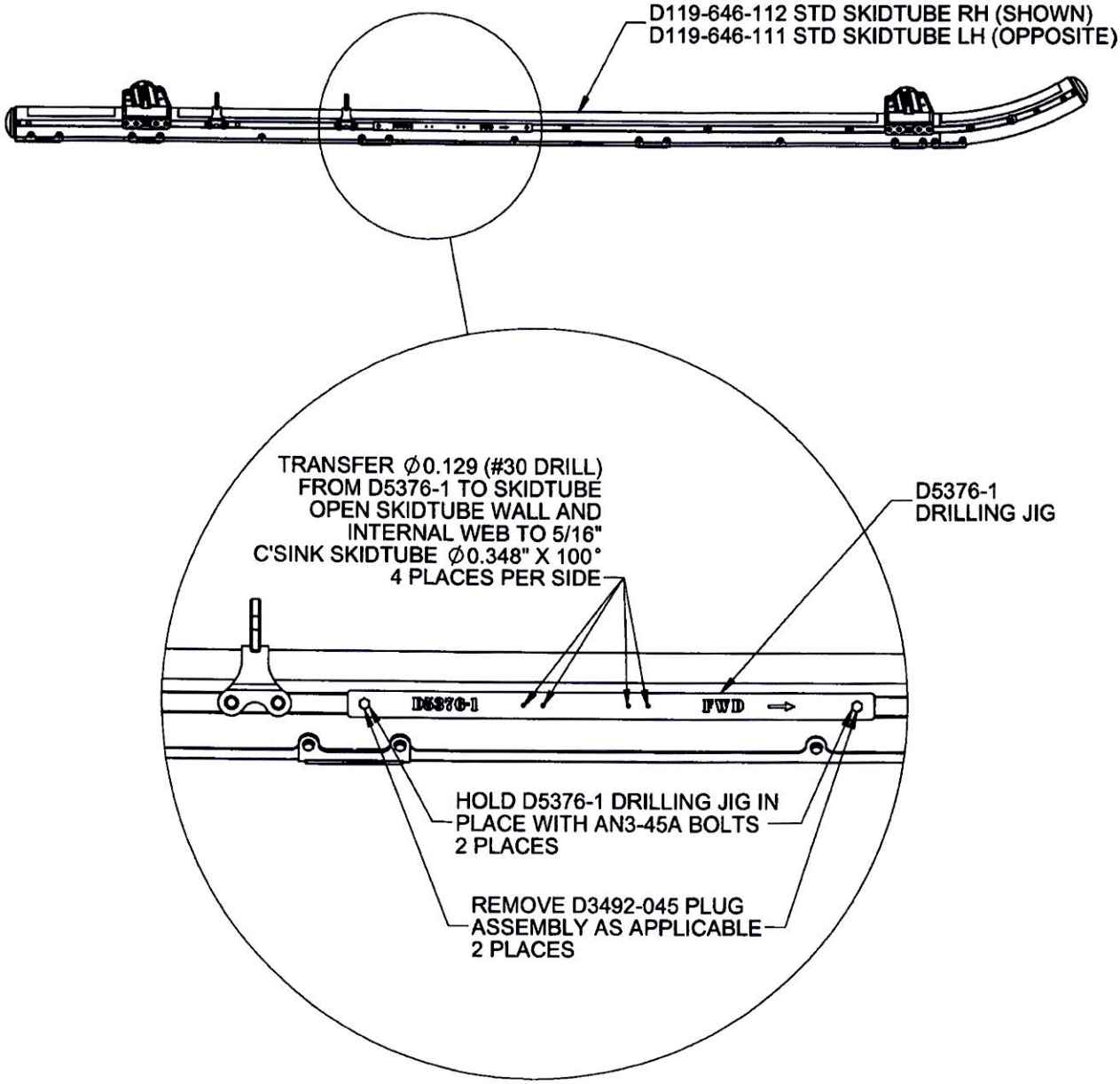

DETAIL D

FIGURE 3: USING D5376-1 DRILLING JIG

DESIGN	RF	**DART AEROSPACE USA, INC.** EUGENE, OR
DRAWN	RF	
CHECKED	HS	DRAWING NO. DSI 9734 — REV. A — SHEET 6 OF 8
MFG. APPR.	N/A	
APPROVED	HS	TITLE SKIDTUBE PROTECTOR KIT — SCALE NTS
DE APPR.		
DATE	15.12.10	

COPYRIGHT © 2014 BY DART AEROSPACE USA, INC.
THIS DOCUMENT IS PRIVATE AND CONFIDENTIAL AND IS SUPPLIED ON THE EXPRESS CONDITION THAT IT IS NOT TO BE USED FOR ANY PURPOSE OR COPIED OR COMMUNICATED TO ANY OTHER PERSON WITHOUT WRITTEN PERMISSION FROM DART AEROSPACE USA, INC.

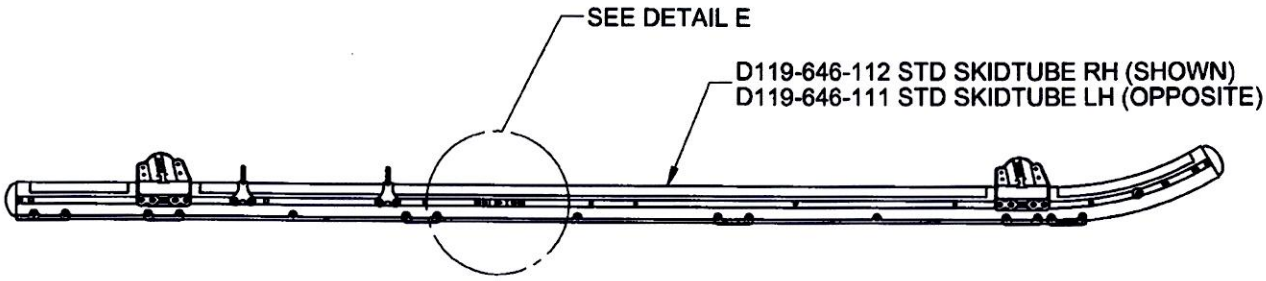

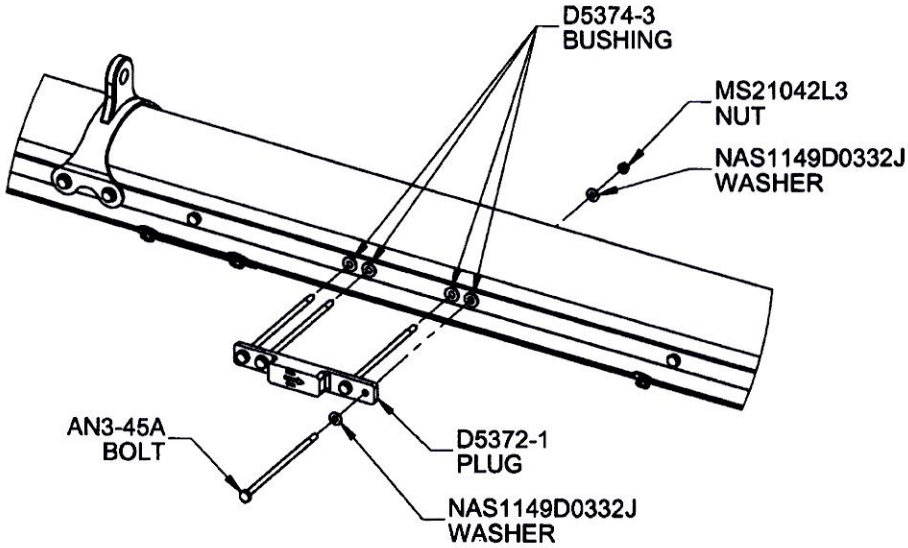

DETAIL E

FIGURE 4: D5372-1 PLUG INSTALLATION

DESIGN	RF	**DART AEROSPACE USA, INC.** EUGENE, OR
DRAWN	RF	
CHECKED	HS	DRAWING NO. DSI 9734 — REV. A — SHEET 7 OF 8
MFG. APPR.	N/A	
APPROVED	HS	TITLE SKIDTUBE PROTECTOR KIT — SCALE NTS
DE APPR.		
DATE	15.12.10	

COPYRIGHT © 2014 BY DART AEROSPACE USA, INC.
THIS DOCUMENT IS PRIVATE AND CONFIDENTIAL AND IS SUPPLIED ON THE EXPRESS CONDITION THAT IT IS NOT TO BE USED FOR ANY PURPOSE OR COPIED OR COMMUNICATED TO ANY OTHER PERSON WITHOUT WRITTEN PERMISSION FROM DART AEROSPACE USA, INC.

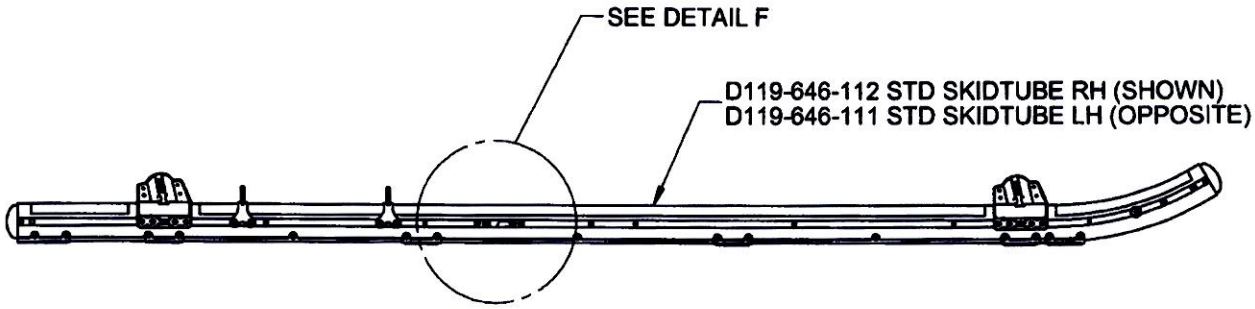

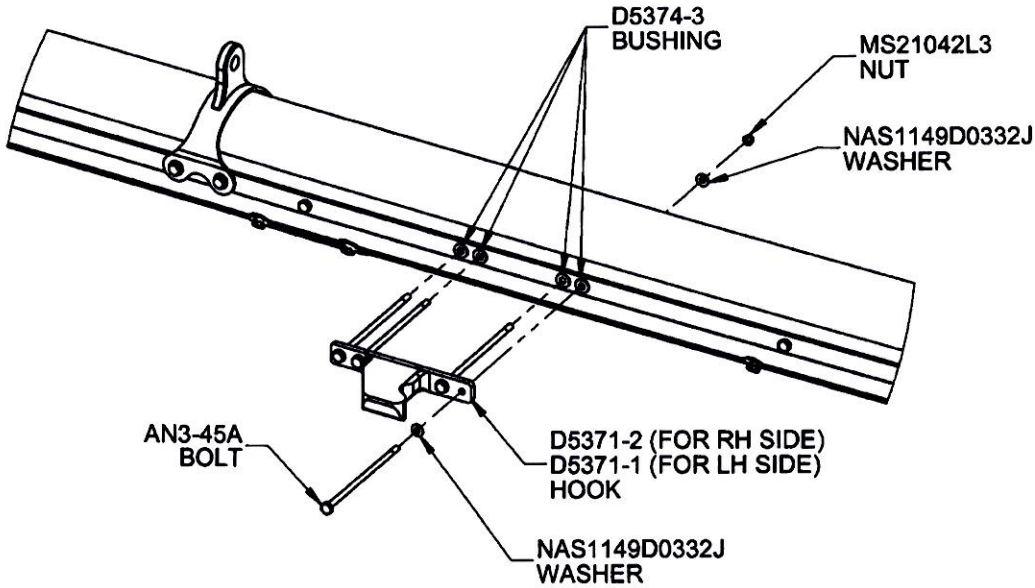

DETAIL F

FIGURE 5: D5371-1/-2 HOOK INSTALLATION

DESIGN	RF	**DART AEROSPACE USA, INC.** EUGENE, OR
DRAWN	RF	
CHECKED	HS	DRAWING NO. DSI 9734 — REV. A — SHEET 8 OF 8
MFG. APPR.	N/A	
APPROVED	HS	TITLE SKIDTUBE PROTECTOR KIT — SCALE NTS
DE APPR.		
DATE	15.12.10	

COPYRIGHT © 2014 BY DART AEROSPACE USA, INC.
THIS DOCUMENT IS PRIVATE AND CONFIDENTIAL AND IS SUPPLIED ON THE EXPRESS CONDITION THAT IT IS NOT TO BE USED FOR ANY PURPOSE OR COPIED OR COMMUNICATED TO ANY OTHER PERSON WITHOUT WRITTEN PERMISSION FROM DART AEROSPACE USA, INC.

Work Order ID 159022

159022

Tuesday, April 04, 2017 4:49:16 PM

Accept *N900040100*

Setup Start *NS1*
Stop *NS2*

Item ID: D119-646-314
Revision ID:
Item Name: Skidtube Protector, RH
Start Date: 4/11/2017 **Start Qty:** 1.00 *1*
Required Date: 4/21/2017 **Req'd Qty:** 1.00 *1*
Reference: SCHEDULED

Cust Item ID:
Customer:

Run Start *NR1*
Stop *NR2*

Approvals: **Process Plan:** _____ **Date:** APR 0 5 2017 **Tooling:** _____ **Date:** _____
QC: _____ **Date:** _____ **SPC (Y/N):** _____ **Date:** _____

Sequence ID/ Work Center ID	Operation Description	Set Up/ Run Hours	Tool ID	Tool #	Plan Code	Accept Qty	Reject Qty	Reject Number	Insp. Stamp
Draw Nbr: DSI9734 / Revision Nbr: A		APR 0 5 2017						DAS 21 9-89	APR 0 6 2017
100	Document Control	0.00				CB			
100	DOCUMENT CONTROL								
DC	**Memo**	0.00							
Doc.Control -USB or Paperwork	Photocopy bluefile & type labels per PPP D119-646-313 CHG001								
110	Pick Kit	0.00							
110									
Packaging	**Memo**	0.00							
Packaging									
120	QC4- 100% Inspect kits for completeness	0.00							
120									
QC	**Memo**	0.03							
Quality Control									

REFERENCE ONLY

4.0 PARTS LIST:

Qty. -313	Qty. -314	PART NUMBER	DESCRIPTION
X		D119-646-313	SKIDTUBE PROTECTOR, LH
	X	D119-646-314	SKIDTUBE PROTECTOR, RH
6	6	D3904-1	WASHER
6	6	D4506-3	WASHER
1		D5369-1	CABLE GUARD, LH
	1	D5369-2	CABLE GUARD, RH
1		D5371-1	HOOK, LH
	1	D5371-2	HOOK, RH
1	1	D5372-1	PLUG
6	6	D5374-1	BUSHING
8	8	D5374-3	BUSHING
1	1	D5376-1	DRILLING JIG
4	4	AN3-45A	BOLT
6	6	AN3-47A	BOLT
6	6	AN3-50A	BOLT
14	14	NAS1149D0332J	WASHER
10	10	MS21042L3	NUT

5.0 WEIGHT AND BALANCE

The following weight and balance changes are applicable:

Installation	Weight	LONGITUDINAL		LATERAL	
		Arm	Moment	Arm	Moment
D119-646-313 SKIDTUBE PROTECTOR, LH	4.3 lb 1.95 kg	108.1 in 4.3 m	465 in-lb 8.4 kg-m	-43.4 in 1.7 m	-187 in-lb -3.3 kg-m
D119-646-314 SKIDTUBE PROTECTOR, RH	4.3 lb 1.95 kg	108.1 in 4.30 m	465 in-lb 8.4 kg-m	43.4 in 1.7 m	187 in-lb 3.3 kg-m

DESIGN	RF	DART AEROSPACE USA, INC. EUGENE, OR
DRAWN	RF	
CHECKED	HS	DRAWING NO. DSI 9734 — REV. A — SHEET 3 OF 8
MFG. APPR.	N/A	
APPROVED	HS	TITLE SKIDTUBE PROTECTOR KIT — SCALE NTS
DE APPR.		
DATE	15.12.10	

COPYRIGHT © 2014 BY DART AEROSPACE USA, INC.
THIS DOCUMENT IS PRIVATE AND CONFIDENTIAL AND IS SUPPLIED ON THE EXPRESS CONDITION THAT IT IS NOT TO BE USED FOR ANY PURPOSE OR COPIED OR COMMUNICATED TO ANY OTHER PERSON WITHOUT WRITTEN PERMISSION FROM DART AEROSPACE USA, INC.